COSMA SYSTEMS

Premium European Design Solutions

cosma

wilson &bradley

CONTENTS

4. Overview

5. Cubo

8. Interna

16. Flag

20. System 16

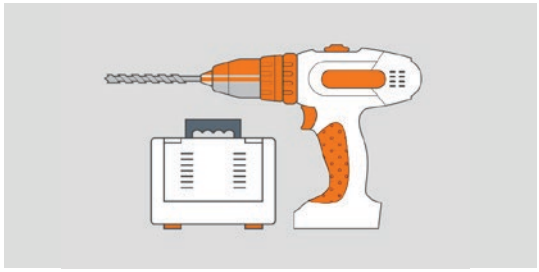

28. Instructions

34. Specifications

COSMA SYSTEMS
ITALIAN DESIGN & MANUFACTURING

WILSON & BRADLEY

Creativity is in your hands! Wilson & Bradley are proud suppliers of Cosma. Since 1955, Cosma has provided high-quality products, creativity and innovation based on a close relationship with designers and manufacturers. Cosma offer a wide range of products, suitable to different tastes, from classic to modern. These include: Rail Systems, Wardrobe Rails and accessories as well as Shelving Systems. These products are characterised by a high design and production standard. Cosma's research and development aligns closely with manufacturers and designers' requirements. Their deep history and knowledge of the furnishing sector allows them to create products suitable for a wide range of uses.

ENVIRONMENTAL COMMITMENT

With state-of-the-art manufacturing facilities, the Cosma processing and product quality control is guaranteed by internal QUALITY TUTOR management procedures. All the production phases are monitored at all times and ensure the highest standards are maintained. They commit to 100% recycling, as well as the use of rainwater throughout the building for all industrial purposes. They use water-based paints without polluting solvent emissions and 100% of energy used comes from renewable sources.

cosma

wilson &bradley

OVERVIEW

Cosma
ECCELLENZA
MADE IN ITALY

cosma

Cosma was founded in 1955 in the heart of the manufacturing district of Brianza, Italy, specialising in the production of hardware items.

Cosma has developed products ranges accessories which satisfy different tastes which apply to all living spaces. The purpose is to create harmony, continuity and finish uniformity between the various metal components of cabinets.

They expanded rapidly and thanks to the direction of the second generation, branched out into foreign markets.

Since 1990, Cosma gradually evolved its production, passing from the die-casting of brass to zamak, a more malleable zinc alloy.

Cosma has becomes a laboratory of ideas for exclusive products with inimitable qualities.

A confidential service for customers all over the world who wish to distinguish themselves by choosing the best quality products for their projects.

Technology is placed at the disposal of production, to which Cosma adds all the craftsmanship experience it has accumulated over the course of 60 years of development in the field.

CUBO

The Cosma Cubo is a modular, versatile and flexible midway rail system ideal for providing easy access to cooking utensils, canisters, paper towel and other useful aids in the kitchen.

L&S Strip Lighting can be added (optional) that illuminates the entire work surface. Available in 3 metre lengths which can be easily cut to size for custom-made applications.

Key Features

- Available in matt black and anodised aluminium - can easily be colour matched with rangehood
- Available in 3 metre lengths - can customise to suit specific requirements
- Stylish optional accessories - practical and simple storage solutions
- Clip fixing profiles making for easy installation and assembly
- Can be retrofitted to existing kitchens
- Material: Aluminium

Available Products

- 3 metre Midway Rail
- 272mm Hanging Shelf
- 420mm Hanging Shelf
- Spice Rack Shelf
- Paper Towel Holder
- Utensils Hook

KEY COMPONENTS

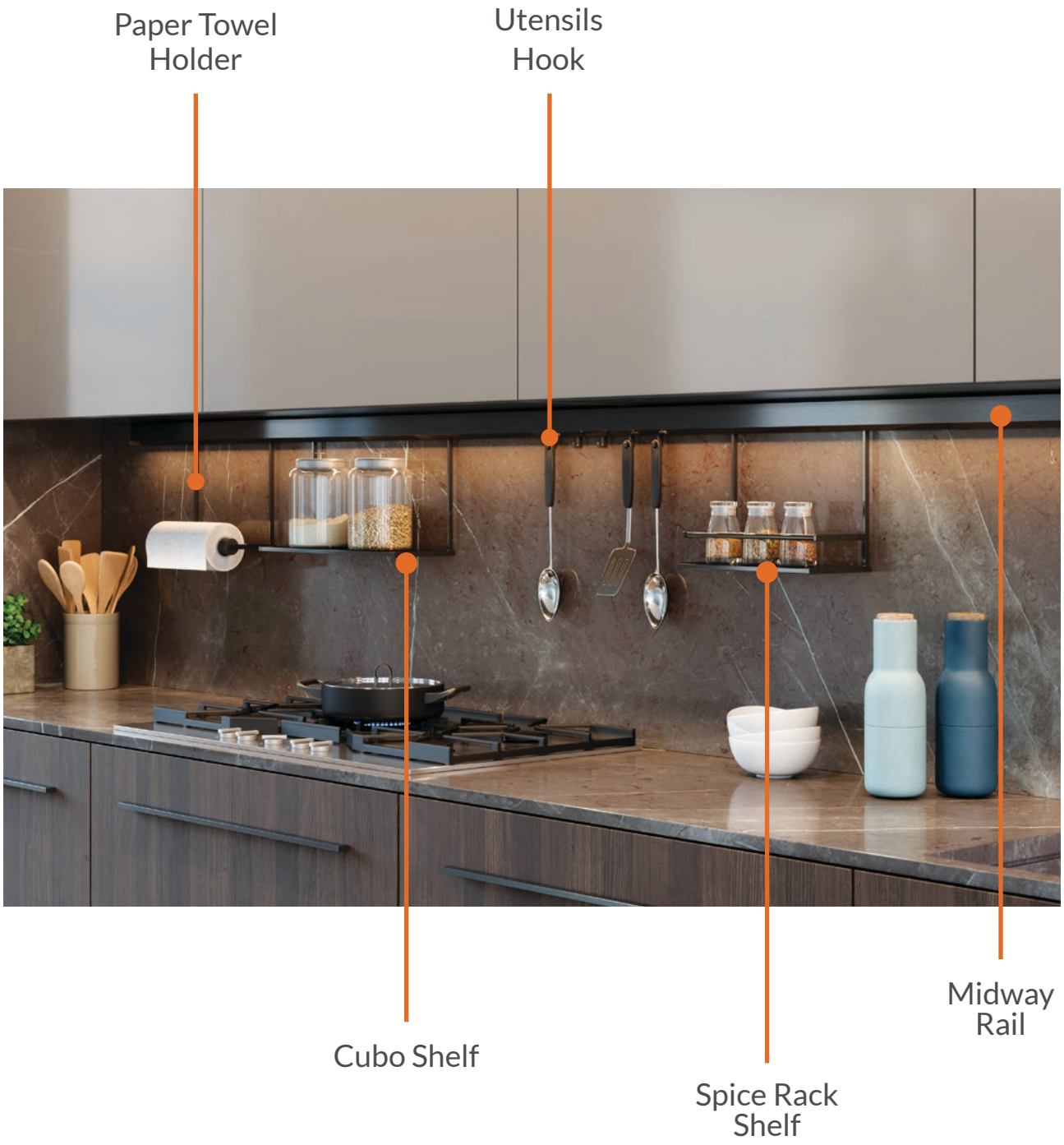

HOW TO ORDER THE CUBO SYSTEM

STEP 1:

Select Required Wall Components

- Midway Rail - Black Profile
- Midway Rail - Anodised Aluminium Profile
- Cubo End Cap Kit (Optional)

STEP 2:

Select Accessories

- Cubo Utensils Hook
- Cubo Shelf
- Cubo Spice Rack Shelf
- Cubo Paper Towel Holder
- Cubo Terminal Clip

OPTIONAL:

Select L&S 24V strip Lighting to suit.

See website for full range

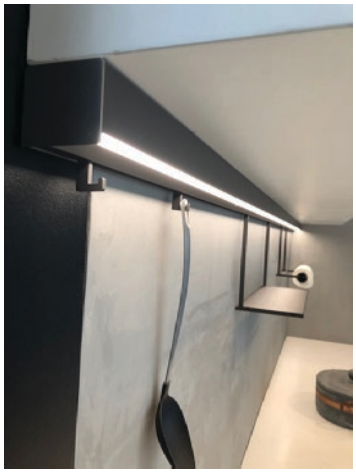

ORDER A CUBO KIT:

Alternatively, you may choose to simply purchase a complete Cubo kit.

See our website for full list of kits and further technical information.

CUBO COMPONENTS

CUBO MIDWAY RAIL

Modular, versatile and flexible midway rail system.

- 2 x Profiles
- 1 x Light Diffuser
- 10 x Assembly Clips

CODE	FINISH	MATERIAL	LENGTH	DEPTH	HEIGHT
CCMRS300B	Black	Aluminium	3 metres	54mm	48mm
CCMRS300A	Anodised Aluminium	Aluminium	3 metres	54mm	48mm

CUBO END CAP KITS

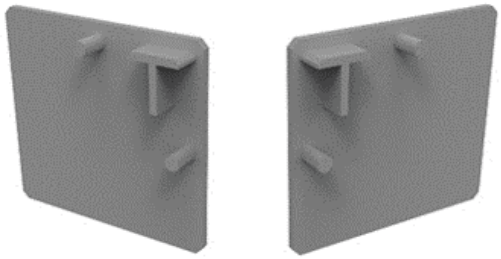

- Left and Right End Cap
- Screws and Allen Key

CODE	FINISH	MATERIAL
CCCAPB	Black	Aluminium
CCCAPA	Anodised Aluminium	Aluminium

CUBO ACCESSORIES

CUBO UTENSIL HOOK

CODE	FINISH	MATERIAL
CCHOOKB	Black	Plastic
CCHOOKA	Anodised Aluminium	Plastic

CUBO SHELF

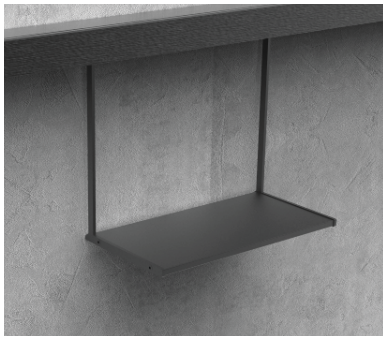

CODE	FINISH	MATERIAL	WIDTH	DEPTH	HEIGHT
CSCR272B	Black	Aluminium	280mm	150mm	235mm
CSCR272A	Anodised Aluminium	Aluminium	280mm	150mm	235mm
CSCR420B	Black	Aluminium	420mm	150mm	235mm
CSCR420A	Anodised Aluminium	Aluminium	420mm	150mm	235mm

CUBO SPICE RACK SHELF

CODE	FINISH	MATERIAL	WIDTH	DEPTH	HEIGHT
CSRSCB	Black	Aluminium	280mm	150mm	235mm
CSRSCA	Anodised Aluminium	Aluminium	280mm	150mm	235mm

CUBO PAPER TOWEL HOLDER

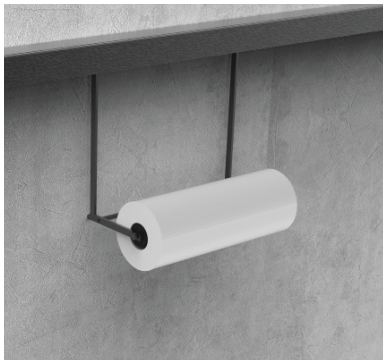

CODE	FINISH	MATERIAL	WIDTH	DEPTH	HEIGHT
CPRHCB	Black	Aluminium	280mm	128mm	235mm
CPRHCA	Anodised Alumini	Aluminium	280mm	128mm	235mm

INTERNA

Interna is the cabinet system that Cosma offers to complete its range of aluminium products.

The strength of the brand is to provide all the metal decorative parts that compose the furniture in order to obtain incomparable uniformity of design and finishes. Installation of the tube can be completed according to your aesthetic and functional needs. This includes side fixing with screws or pins and assembly from above with visible or hidden screws providing total versatility.

The support for top assembly is dedicated to those who want to create elegant and refined wardrobes and walk-in closets. It can be fixed to the shelf in two ways: by inserting the screws from the top (thus leaving the head visible) or gripping the shelf from below. The closing cap allows to keep the tube in position and to hide the fixing system.

The support for the lateral assembly of the tube is available in the version with and without pins. The PVC cap hides the fixing system and performs the important function of anchoring the tube.

Key Features

- Anti slip insert – prevents clothes sliding needlessly
- Available in 1.4m lengths – versatile, can easily cut to size
- Uniformity of design and finish – delivers a modern and elegant wardrobe design
- Available in matt black or anodised aluminium finishes – to stylishly match any design
- Hook locking system – secure and safe connection between the tube and tube support

KEY COMPONENTS

HOW TO ORDER THE INTERNA SYSTEM

STEP 1:

Select Required Wardrobe Rail Colour

- Black or Anodised Aluminium

STEP 2:

Select Fittings

- Top Assembly
- Side Support with Screws
- Side Support with Pins

STEP 3:

Select Covers

- Safety Block
- Screws Cover

Interna Wardrobe Rail

INTERNA COMPONENTS

INTERNA WARDROBE RAIL

- Anti-slip wardrobe rail prevents clothes sliding needlessly.
- Made in Italy.
- Hook locking system.

CODE	FINISH	MATERIAL	LENGTH	TUBE SIZE
CIAT1400B	Black	Aluminium	1.4m	30 x 19mm
CIAT1400A	Anodised Aluminium	Aluminium	1.4m	30 x 19mm

INTERNA FITTINGS

INTERNA TOP ASSEMBLY SUPPORT

- Includes screws

CODE	FINISH	MATERIAL	FITTING SIDE	WIDTH	HEIGHT
CITASLB	Black	Metal	Left	15mm	75mm
CITASLA	Anodised Aluminium	Metal	Left	15mm	75mm
CITASRB	Black	Metal	Right	15mm	75mm
CITASRA	Anodised Aluminium	Metal	Right	15mm	75mm

INTERNA SUPPORT WITH PIN FOR SIDE ASSEMBLY

CODE	FINISH	MATERIAL	WIDTH	HEIGHT
CISPSAB	Black	Metal	25mm	48mm
CISPSAA	Anodised Aluminium	Metal	25mm	48mm

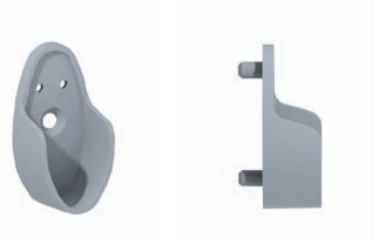

INTERNA FITTINGS

INTERNA SUPPORT WITH SCREWS FOR SIDE ASSEMBLING

CODE	FINISH	MATERIAL	WIDTH	HEIGHT
CISSSAB	Black	Metal	25mm	48mm
CISSSAA	Anodised Aluminium	Metal	25mm	48mm

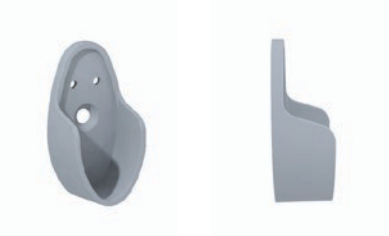

INTERNA COVER

INTERNA ABS SAFETY BLOCK FOR SIDE ASSEMBLING

CODE	FINISH	MATERIAL
CIASBB	Black	Plastic
CIASBA	Anodised Aluminium	Plastic

INTERNA ABS SCREWS COVER FOR TOP ASSEMBLING

CODE	FINISH	MATERIAL
CIASCB	Black	Plastic
CIASCA	Anodised Aluminium	Plastic

FLAG

Flag is a modular and customisable system made entirely of aluminum. Minimal and elegant, it can raise the quality and the image of kitchens, living rooms and bathrooms.

What makes it unique is the ability to adapt itself to different needs by changing the position of the shelves and of the accessories. The customer can also complete it using shelves that reflect the essence of the furniture in which it is integrated.

Key Features

- Uprights available in 3m lengths - can easily be cut to required size
- Shelves available from 300-900mm - can easily customise to individual needs
- Height adjustable shelves - can change positions at any time
- Minimal and elegant design - practical, simple and attractive storage solution
- Optional Shelving rail available - added protection for stored items
- Attractive hanging accessories available - additional uses providing more storage

Available Products

- 3 metre upright profile
- 300, 450, 600 & 900mm shelves
- 300, 450, 600 & 900mm shelving rail with rail supports
- Accessories - hook, paper towel holder and glass holders
- Assembly - Shelf and Wall Mounting Kit, single & double cover caps

KEY COMPONENTS

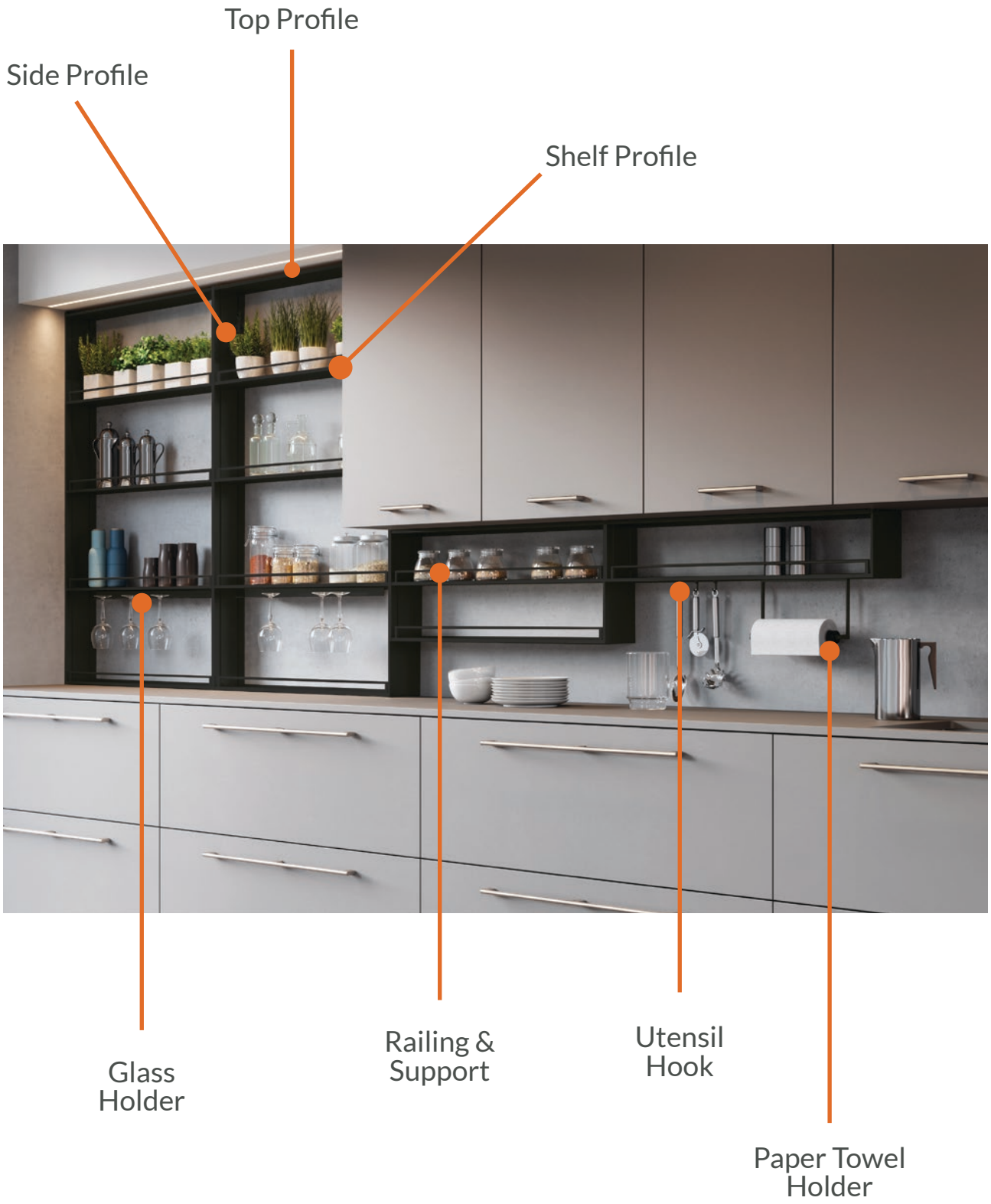

FLEXIBLE DESIGN

The flexibility of the Flag system allows the user to express their creativity.

The product can be retro-fitted, and is suitable for a range of spaces within the home. It can also be paired with some convenient and stylish storage accessories.

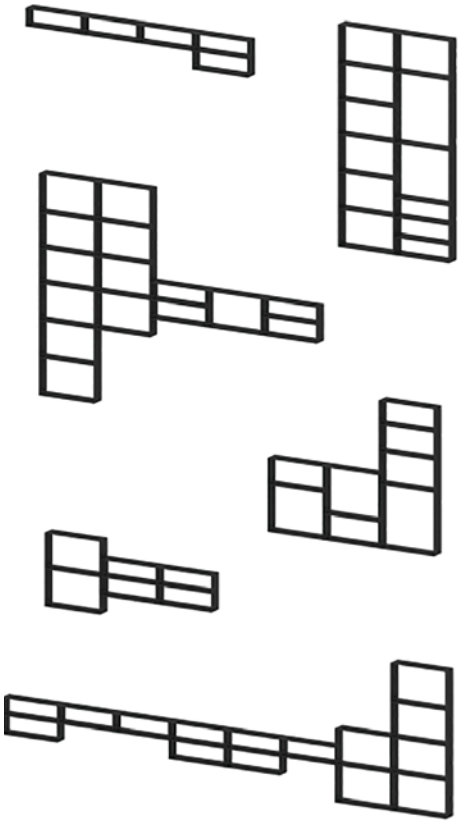

HOW TO ORDER THE FLAG SYSTEM

STEP 1:

Select Required Wall Components

- Side Profile

STEP 2:

Select Shelving Components

- Top Profile
- Shelf Profile
- Single Cap
- Double Cap
- Railing & Support
- Shelf and Wall Mounting Kit

STEP 3:

Select Accessories

- Utensils Hook
- Paper Towel Holder
- Glass Holder

OPTIONAL:

Select L&S 24V Strip Lighting to suit.

See website for full range

ORDER A FLAG KIT:

Alternatively, you may choose to simply purchase a complete Flag kit.

See our website for full list of kits and further technical information.

FLAG COMPONENTS

FLAG SIDE PROFILE

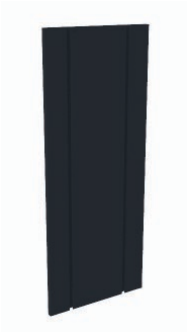

The side profile has vertical guides that allow the height adjustment and the distance between the shelves according to your space requirements. The only shelves with forced positioning are the two perimeters that create the frame of the module.

CODE	FINISH	MATERIAL	LENGTH	DEPTH
CFG3000UR	Black	Aluminium	3000mm	140mm

FLAG SHELVING COMPONENTS

FLAG SHELF PROFILE

The shelves are available in four sizes, providing standard widths from 300mm to 900mm while the height of the upright can be cut to size to adapt to the specified design.

CODE	FINISH	MATERIAL	WIDTH	WIDTH
CFG300SH	Black	Aluminium	300mm	140mm
CFG450SH	Black	Aluminium	450mm	140mm
CFG600SH	Black	Aluminium	600mm	140mm
CFG900SH	Black	Aluminium	900mm	140mm

FLAG TOP PROFILE

CODE	FINISH	MATERIAL	WIDTH	DEPTH
CFG300TSH	Black	Aluminium	300mm	140mm
CFG450TSH	Black	Aluminium	450mm	140mm
CFG600TSH	Black	Aluminium	600mm	140mm
CFG900TSH	Black	Aluminium	900mm	140mm

COLOGNE
COLOGNE
COLOGNE

FLAG SHELVING COMPONENTS

FLAG SHELF AND WALL MOUNTING KIT

The shelf fixing set fits between the upright to assist with the secure installation to the wall. The wall mounting bar attaches at both ends to the shelf fixing brackets. This provides a stable base where the shelf is screwed into the wall via the brackets.

CODE	FINISH	MATERIAL	WIDTH
CFGMK300	Nat Aluminium	Aluminium	300mm
CFGMK450	Nat Aluminium	Aluminium	450mm
CFGMK600	Nat Aluminium	Aluminium	600mm
CFGMK900	Nat Aluminium	Aluminium	900mm

FLAG SINGLE CAP

The caps are used as a decorative cover which fits on the top of the side profile and should be used whenever the frame of the upright is in sight.

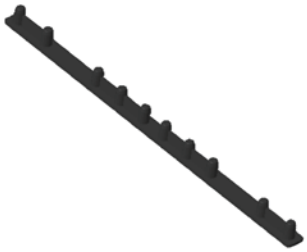

CODE	FINISH	MATERIAL
CFGSC	Black	Plastic

FLAG DOUBLE CAP

CODE	FINISH	MATERIAL
CFGDC	Black	Plastic

FLAG SHELVING COMPONENTS

FLAG SHELF RAILING AND SUPPORT

The Flag Railing supports are easily fitted to the shelf in the space provided. The rail then clips straight into the supports to complete the assembly.

CODE	FINISH	MATERIAL	WIDTH	HEIGHT
CFG300RS	Black	Aluminium	300mm	40mm
CFG450RS	Black	Aluminium	450mm	40mm
CFG600RS	Black	Aluminium	600mm	40mm
CFG900RS	Black	Aluminium	900mm	40mm

FLAG ACCESSORIES

All the accessories of the Flag System are equipped with a detail specifically designed to be inserted inside the groove of the shelf. In this way, all the shelves can be completed by including the desired accessories. You can decide at any time to add them, remove them or change their position.

FLAG UTENSIL HOOK

CODE	FINISH	MATERIAL
CFG120H	Black	Plastic

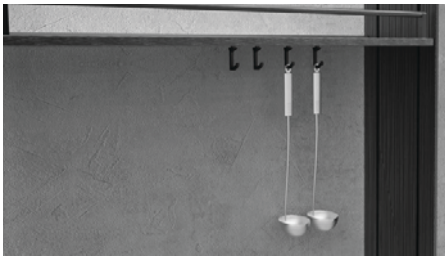

FLAG PAPER TOWEL HOLDER

CODE	FINISH	MATERIAL	WIDTH	DEPTH	HEIGHT
CFG121RH	Black	Aluminium	280mm	73mm	110mm

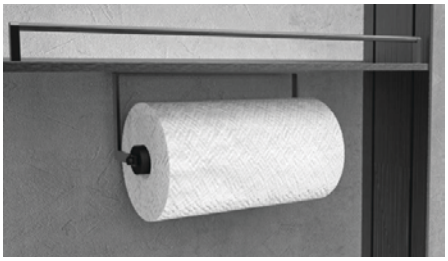

FLAG GLASS HOLDER

CODE	FINISH	MATERIAL	WIDTH	DEPTH
CFG122GH	Black	Aluminium	528mm	111mm

SYSTEM 16

System 16 is a system of structures designed to integrate, complete and create stylish environments within homes.

It is composed of aluminum frames that accommodate shelves of different thicknesses and materials. Depending on the customer's needs, the product can be integrated into the kitchen bases, or fixed to the wall. The upright can also include LED strips to create exciting light and shadows effects on the wall.

Key Features

- Available in two depths, 250mm & 360mm – choose the most suitable depth for the job
- 16mm x 16mm aluminium frame
- Available in four different lengths (360, 720, 1440 & 1800mm) – versatile, can easily be customised to suit any space or room
- Available in matt black – delivers a modern and elegant look that matches most living spaces
- Smart modular design – can assemble shelves in a straight line or different levels
- Can accommodate wooden shelves
- Can be fitted on a wall or under bench – added versatility of use

Available Products

- Modular Standard Shelving: 250mm deep by 360, 720, 1440 & 1800mm high
- Modular Standard Shelving: 356mm deep by 360, 720, 1440 & 1800mm high
- Adjustable Legs: 90-120 & 140-170mm

KEY COMPONENTS

Aluminium
Shelving Frame

Adjustable
Legs

HOW TO ORDER THE SYSTEM 16

STEP 1:

Select Required Wall Components

- Aluminium Shelving Frame

STEP 2:

Select Legs (If Required)

- Adjustable Legs

OPTIONAL:

Select L&S 24V strip Lighting to suit.

See website for full range

FLEXIBLE DESIGN

The modularity of the System 16 allows the user to deeply express their creative nature, making this system not only practical and stylish but also attractive and versatile.

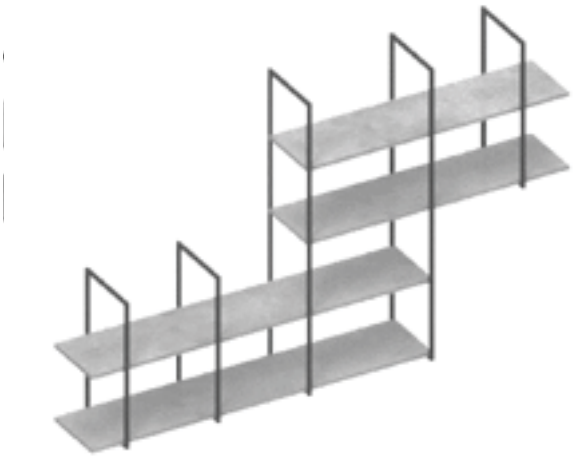

Guggenheim Museum
Photography
MAKING IT
THE ALLURE OF WOMEN
POETRY
Matthew Parsley
FINE WINES
BE YOUR OWN BOSS
OF COMMON OBJECTS
TECTURAL ANTIQUES

SYSTEM 16 COMPONENTS

250MM MODULAR SHELVING FRAME

CODE	FINISH	SHELVES	DEPTH	HEIGHT
CSYS25036	Black	1 (360mm)	250mm	360mm
CSYS25072	Black	2 (720mm)	250mm	720mm
CSYS250144	Black	4 (1440mm)	250mm	1440mm
CSYS250214	Black	5 (1800mm)	250mm	1800mm

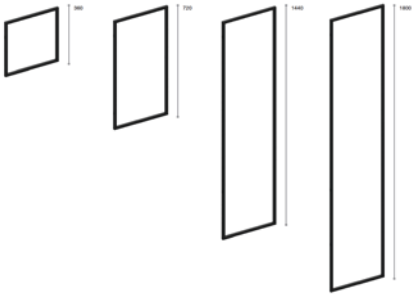

356MM MODULAR SHELVING FRAME

CODE	FINISH	SHELVES	DEPTH	HEIGHT
CSYS35636	Black	1 (360mm)	356mm	360mm
CSYS35672	Black	2 (720mm)	356mm	720mm
CSYS356144	Black	4 (1440mm)	356mm	1440mm
CSYS356214	Black	5 (1800mm)	356mm	1800mm

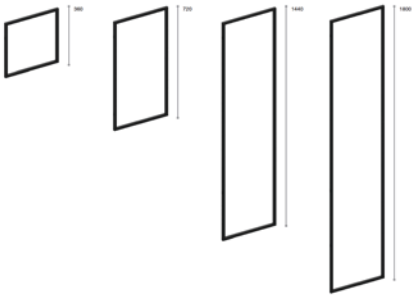

The standard modules are available in 2 depths and 4 different heights. The uprights are drilled at 360 mm distance for the insertion of shelves (wooden). Each module shelving frame is supplied with mounting accessories and shelf supports which are pre attached. The adjustable feet are provided separately.

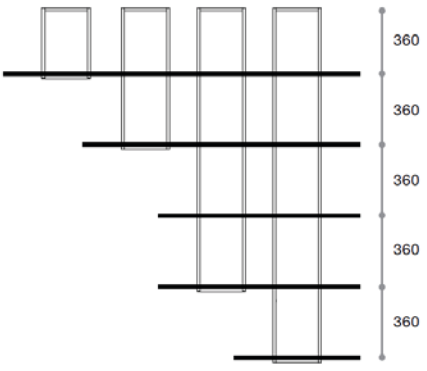

WALTER FINANCE
FROZEN
ADJUST
COMMON
Donna Summer - The Secret Story
The power of carnival
GROVER CLEVELAND
ROTATE
CIGARETTE
ABSENT
STUDIO
English circus
Kindergarten
THE MOTHER MAKER
pierre cardin
DINNER
THRUST
KIDNEY
FLOAT
FRED ROGERS
MANAGE
GUITAR
MARKETING
MARK
LOVING
String
Geisha
MISERY

SYSTEM 16 ACCESSORIES

ADJUSTABLE LEGS

CODE	FINISH	MATERIAL	HEIGHT
CSYAL120B	Black	Aluminium	90-120mm
CSYAL170B	Black	Aluminium	140-170mm

Geisha
Hatchet
WALTER ISAACSON
ENCHANTRESS
JAMES MAXWELL
Kindergarten
The power of carrival
CHANEL'S CLASSIC REVISITED

INSTRUCTIONS - CUBO

CUBO INSTALLATION

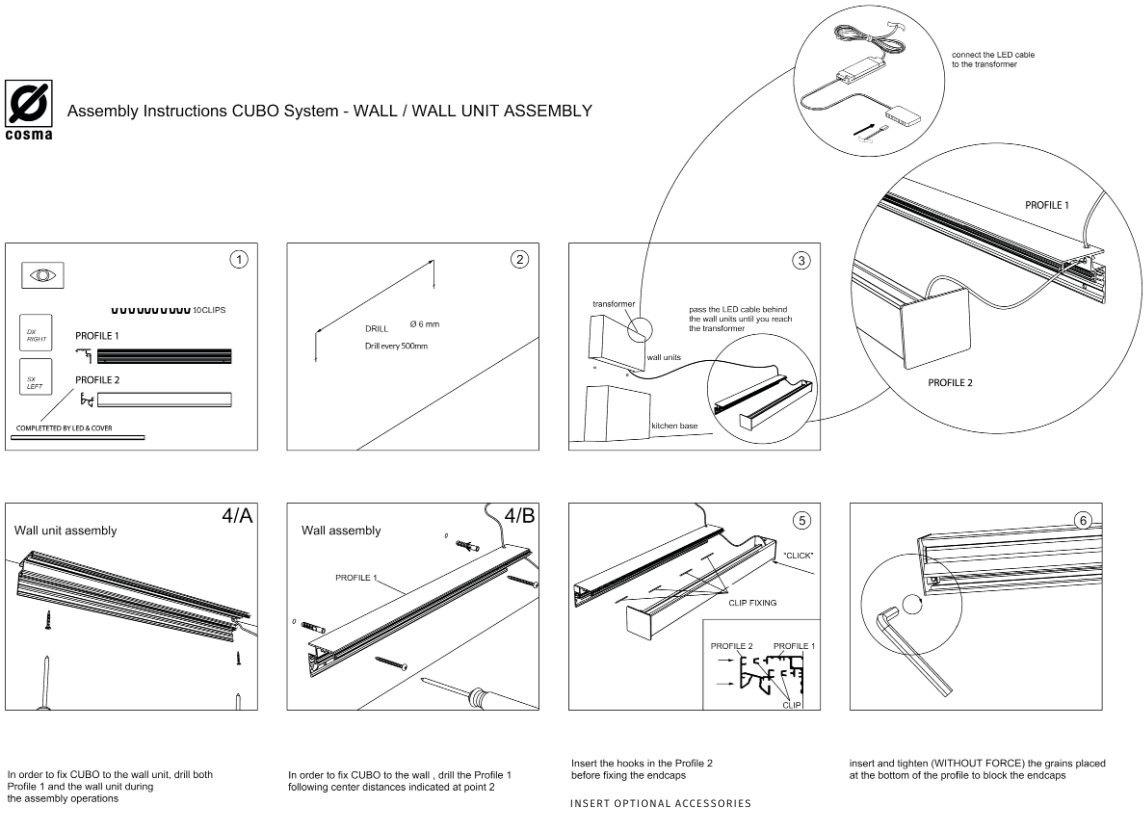

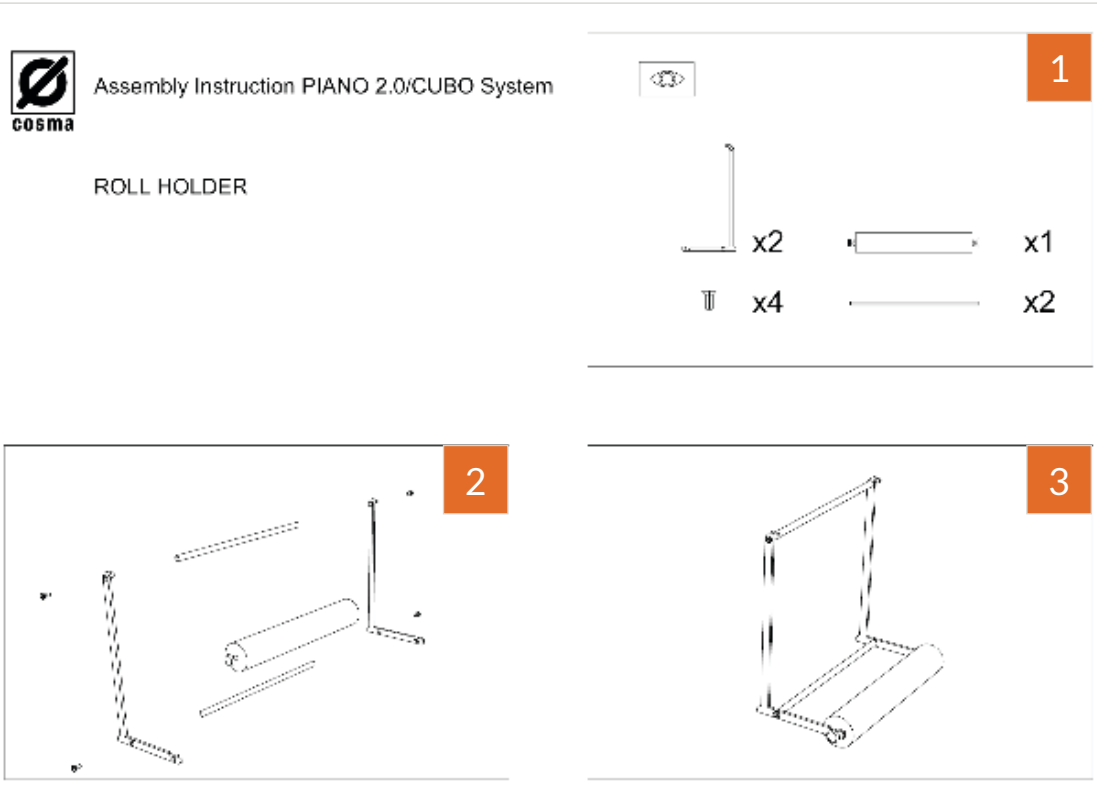

INSTRUCTIONS - CUBO

CUBO INSTALLATION

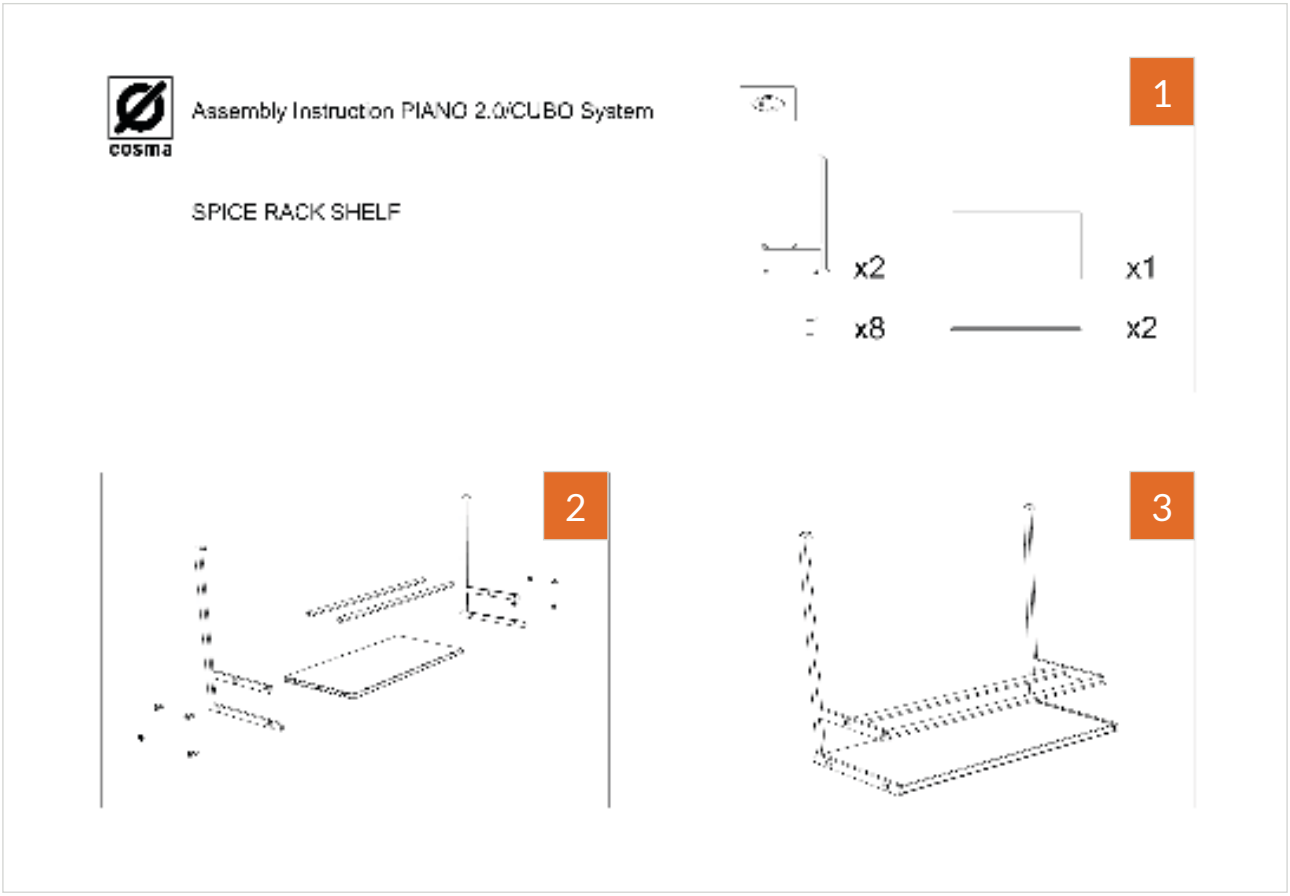

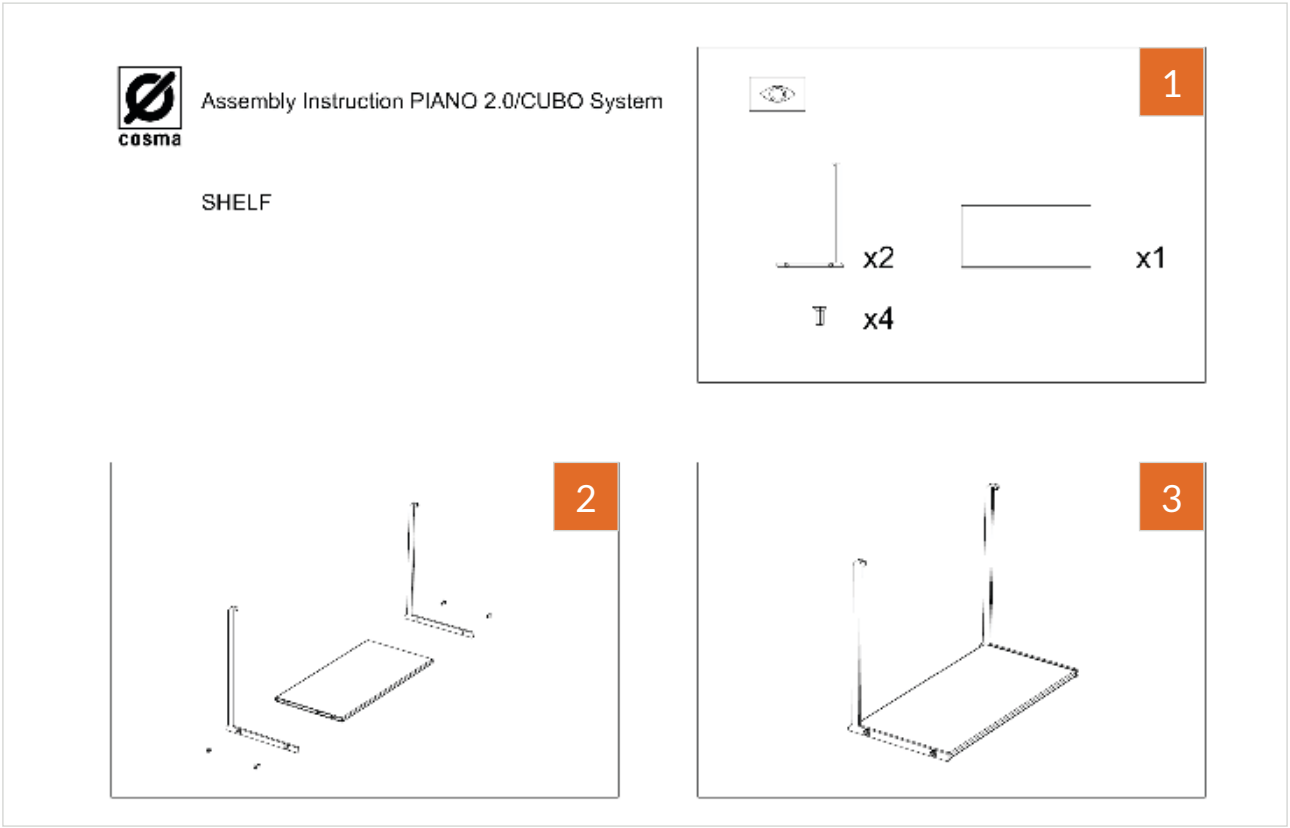

INSTRUCTIONS - FLAG

1

X4

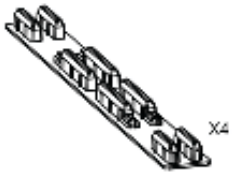

X4

XN
KIT PACKAGE FOR MOUNTING BAR

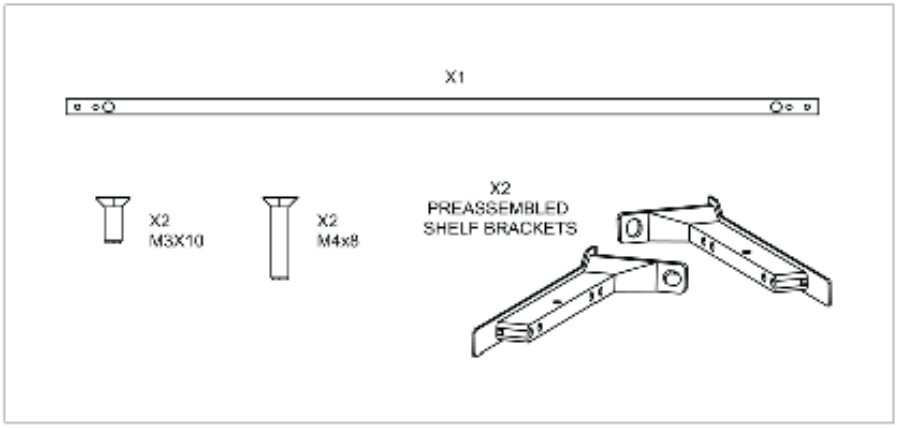

XN
SHELF FRONT RAIL KIT

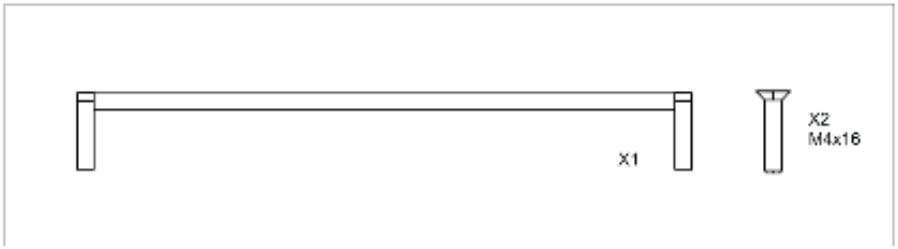

X2
VERTICAL SIDES

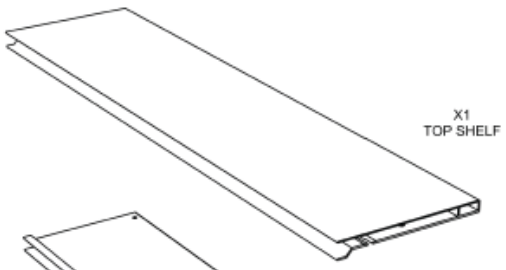

X1
TOP SHELF

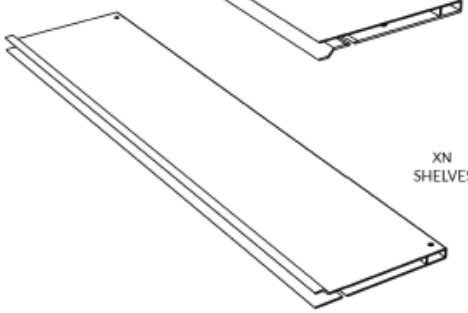

XN
SHELVES

INSTRUCTIONS - FLAG

2

DRILL THE VERTICAL SIDE PROFILE, TOP & BOTTOM
USING A 2.5MM DRILL BIT AND JIG SUPPLIED.
THEN THREAD THESE HOLES WITH A M3 TAP.

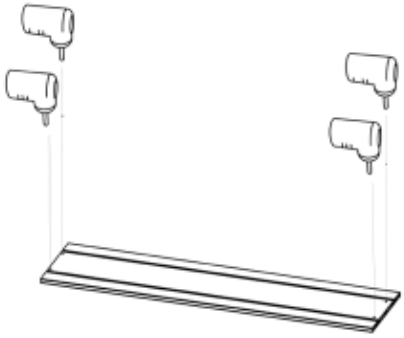

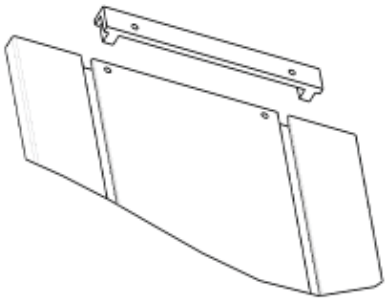

3

INSERT AND SLIDE THE SHELF BRACKETS INTO THE
VERTICAL SIDE PROFILES TO YOUR DESIRED HEIGHT
THEN TIGHTEN SCREWS TO LOCK INTO POSITION.

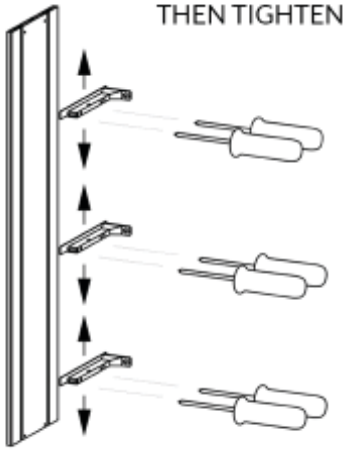

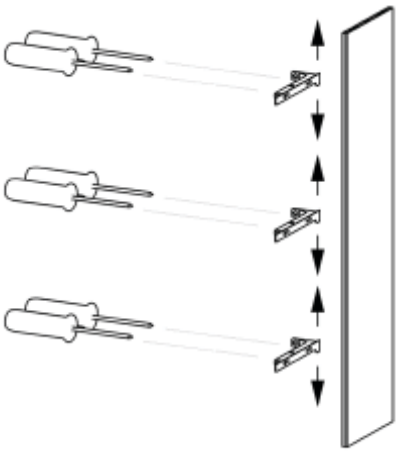

INSTRUCTIONS - FLAG

4

TOP AND BOTTOM BRACKETS.
LOOSEN SCREWS OFF THEN REMOVE
SQUARE LOCKING TABS

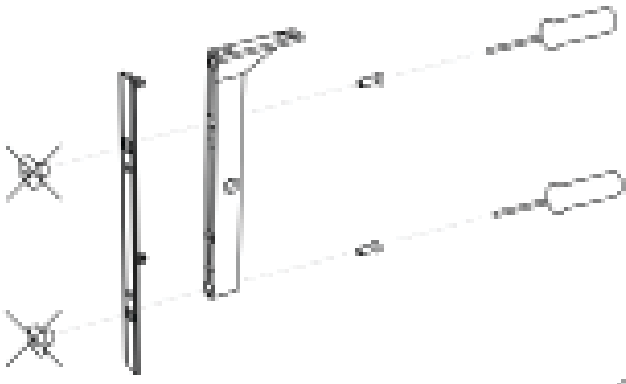

INSERT AND SLIDE THE SHELF BRACKETS
INTO THE TOP AND BOTTOM OF THE
VERTICAL SIDE PROFILES.
TIGHTEN SCREWS INTO THE M5 HOLES
TO LOCK INTO POSITION.

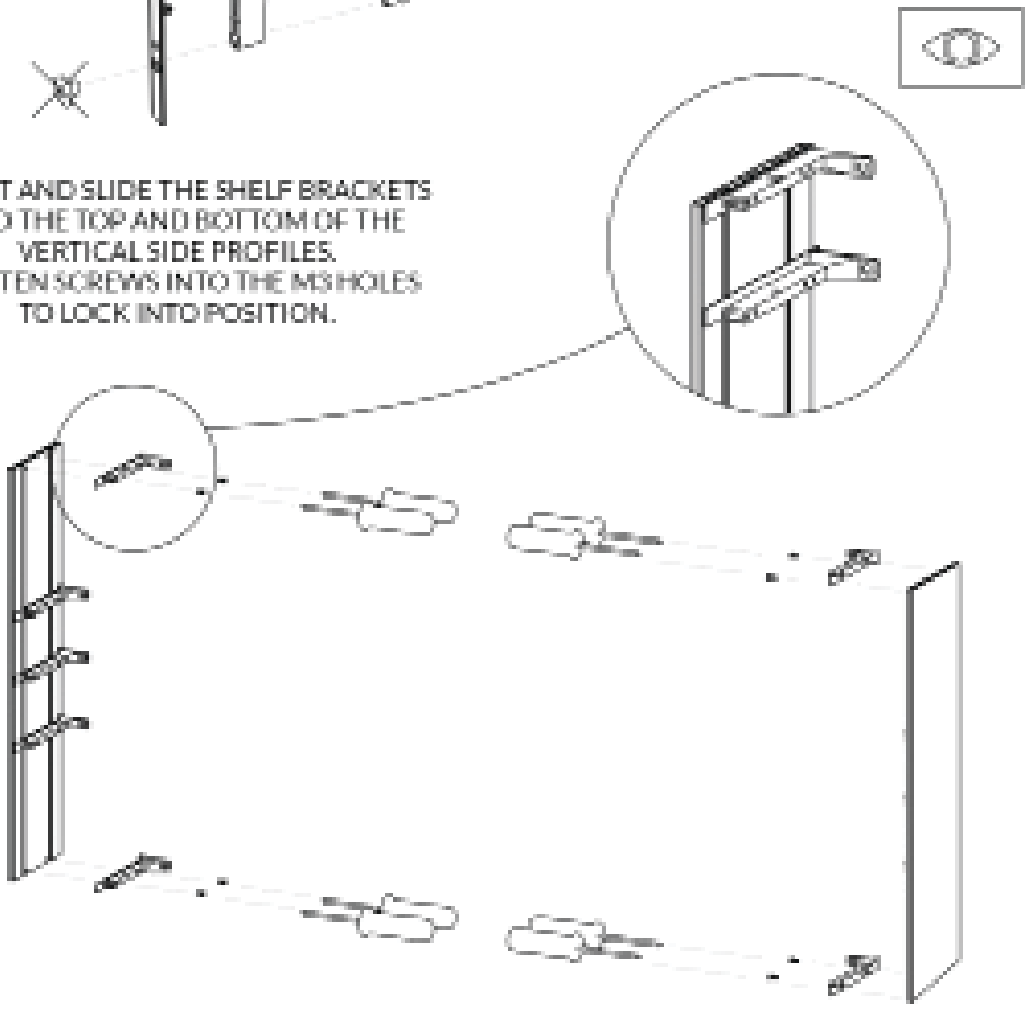

INSTRUCTIONS - FLAG

5

SCREW THE MOUNTING BARS ONTO THE BACK OF THE SHELF BRACKETS WITH M3 X 10 SCREWS SUPPLIED.

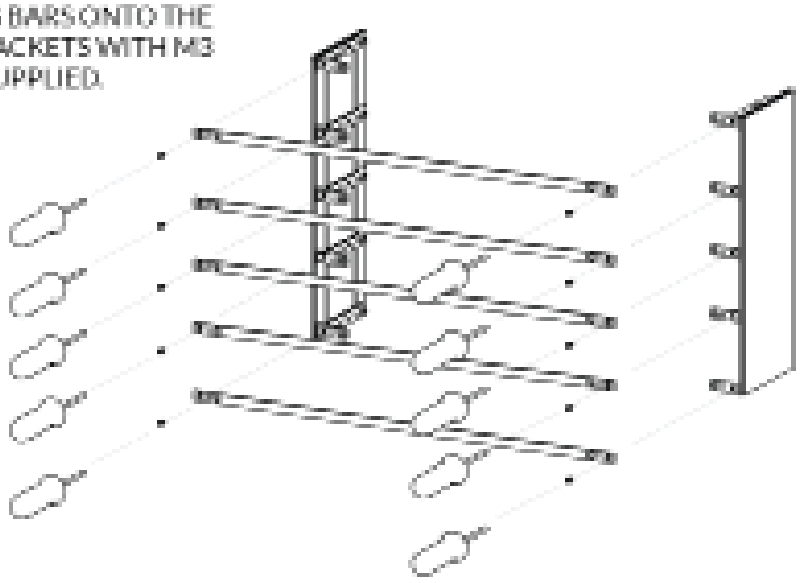

PLACE FLAG SYSTEM AGAINST WALL IN DESIRED POSITION, MARK HOLES ON WALL IF NEEDED FOR FIXING APPLICATION AND PRE DRILL IF NECESSARY

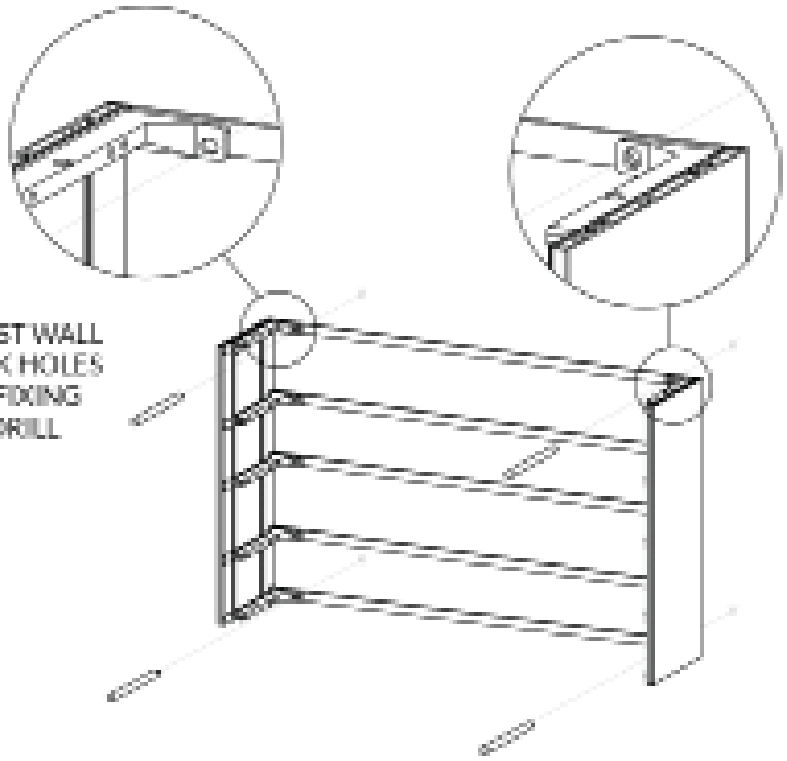

INSTRUCTIONS - FLAG

6

SCREW FLAG SYSTEM TO THE WALL IN DESIRED POSITION. FIXING SCREW'S TO BE DETERMINED BY INSTALLER.

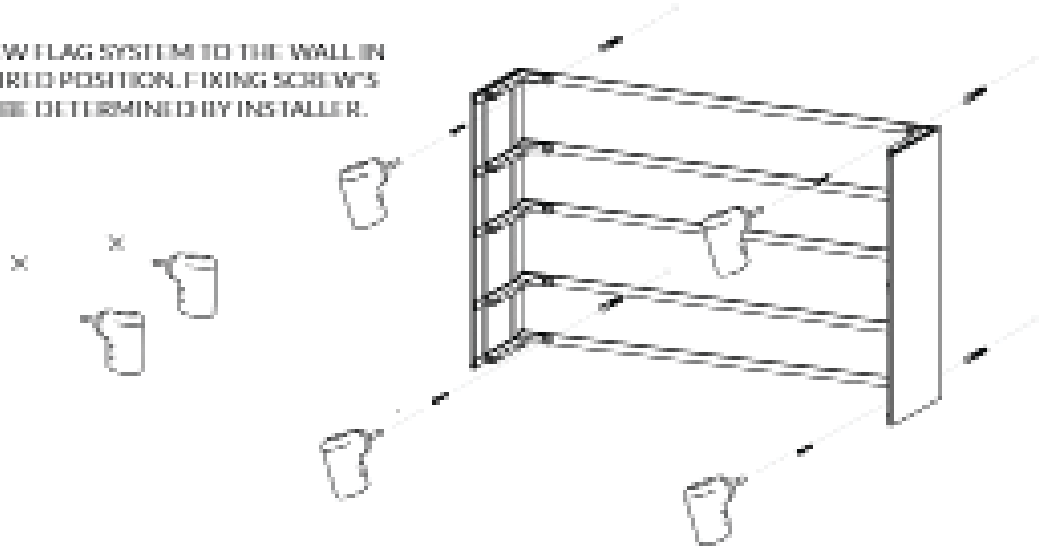

FIX OFF SHELF RAILING AND SUPPORT WITH SCREWS SUPPLIED, THEN SLIDE TOP PROFILE AND SHELVES INTO POSITION

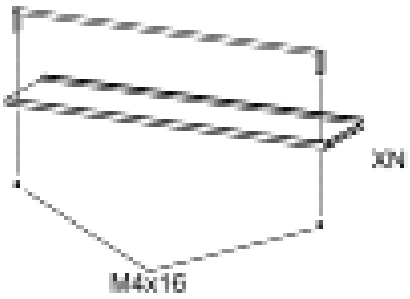

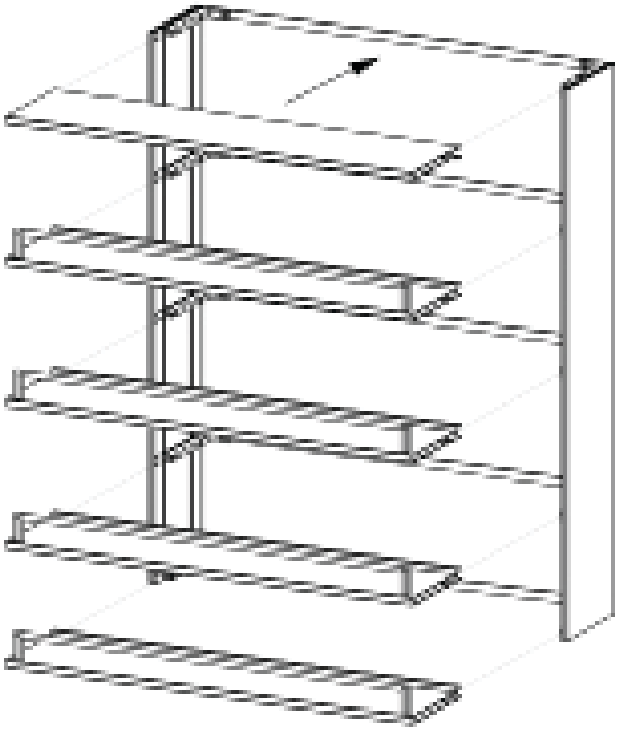

INSTRUCTIONS - FLAG

7

FIX OFF TOP PROFILE AND SHELVES WITH SCREWS SUPPLIED.

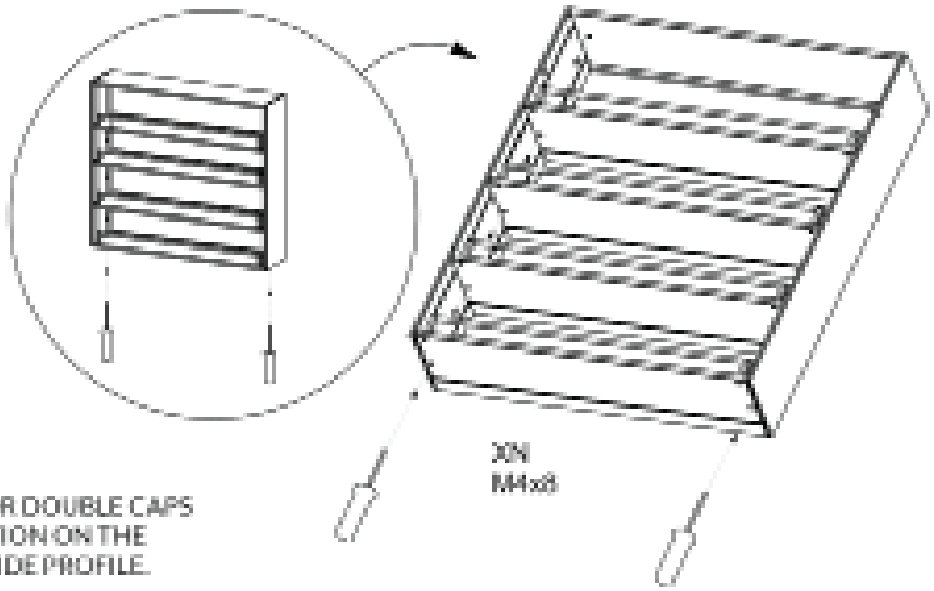

PUSH SINGLE OR DOUBLE CAPS INTO POSITION ON THE VERTICAL SIDE PROFILE.

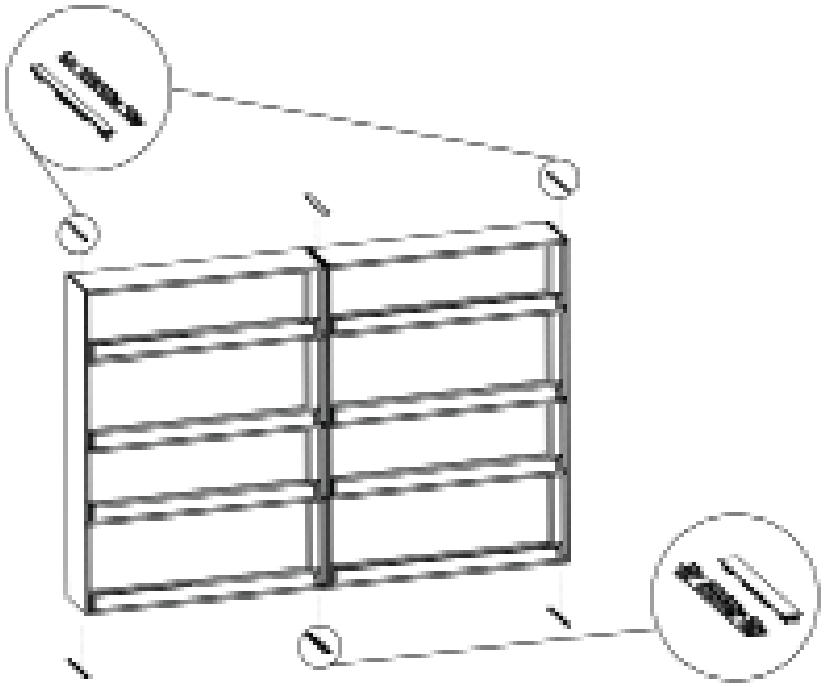

INSTRUCTIONS - SYSTEM 16

SYSTEM 16 MOUNTING INSTALLATION

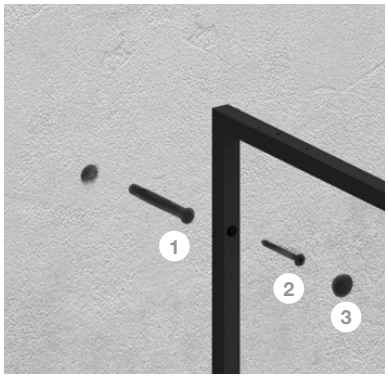

1. Wall Mate
2. Screw
3. Screw Cap

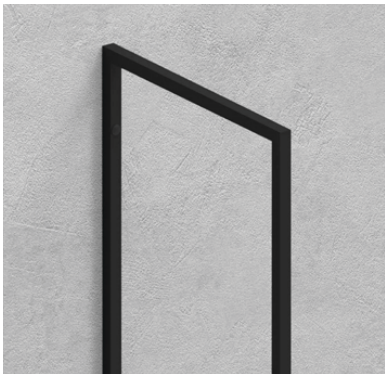

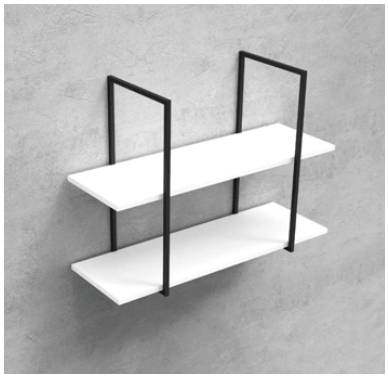

Front mounting is very practical and immediate.
The hole through which the screw passes is covered by a thin cap, which is supplied in the same finish of the aluminum profile.

SYSTEM 16 LEG INSTALLATION

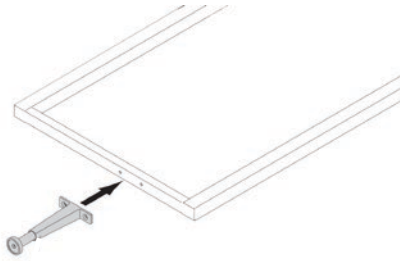

Mark out the drilling position.

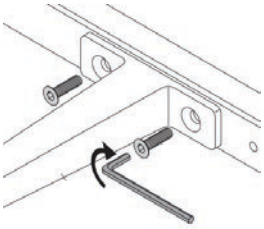

Insert the screws and tighten using an Allen Key.

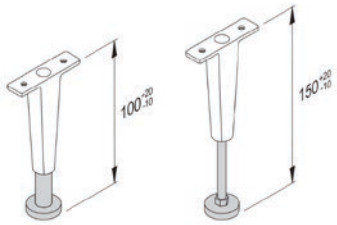

Adjust the legs to the required height.

Disclaimer
1800mm Frame pre drilled only.
Other frames used with legs will need to be drilled and tapped.
2 x M4 x 10mm screws supplied with each leg.

INSTRUCTIONS - SYSTEM 16

SYSTEM 16 SHELF INSTALLATION

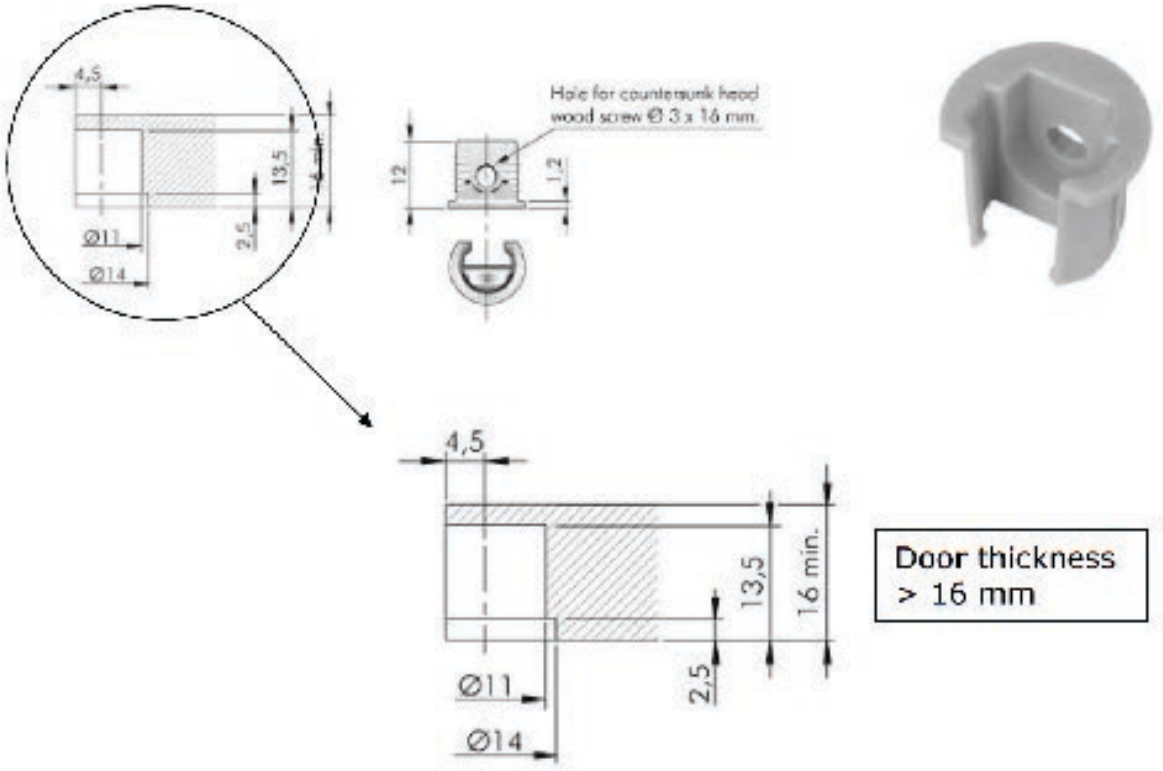

You must opt for a thickness ≥ 16 mm.
The support is incorporated inside the panel itself.

Hole/ rebate required:
First using a spade/forstner bit drill 2.5mm deep x 14mm dia.

Second hole total outside diameter 13.5mm deep or 11mm deeper than first hole x 11mm dia.

Both holes drilled at 4.5mm from outside edge

SPECS - CUBO

CUBO KIT COMPONENTS

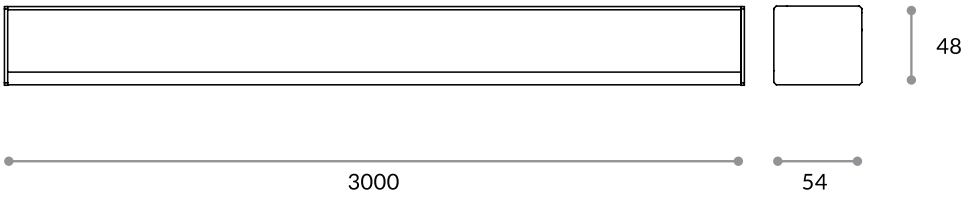

CUBO HOOK

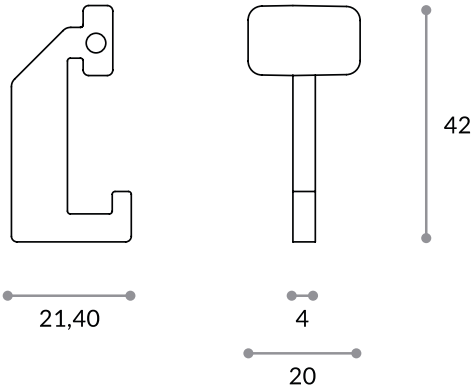

CUBO SHELF

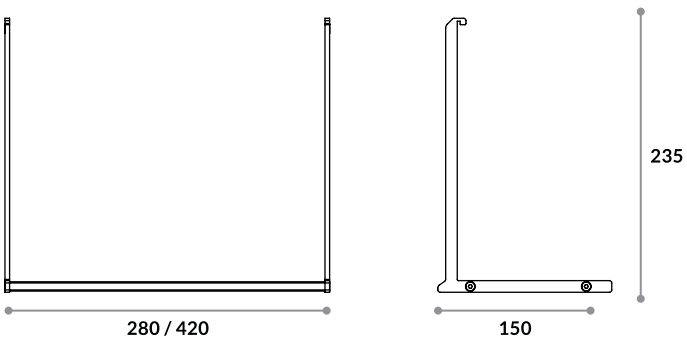

SPECS - CUBO

CUBO SHELF

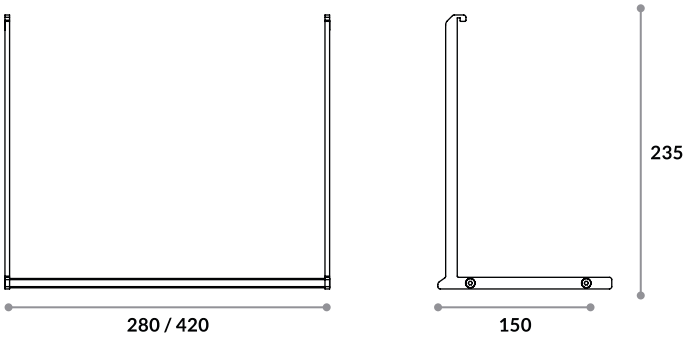

CUBO SPICE RACK SHELF

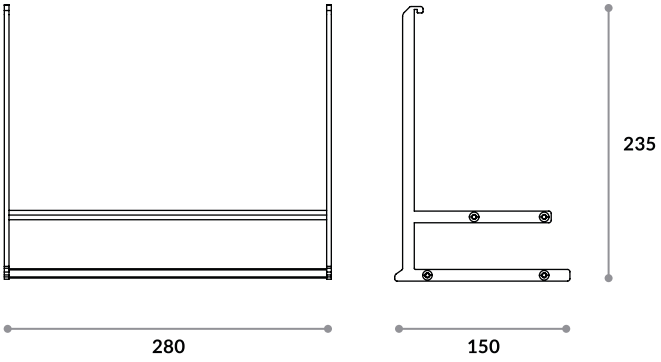

CUBO PAPER ROLL HOLDER

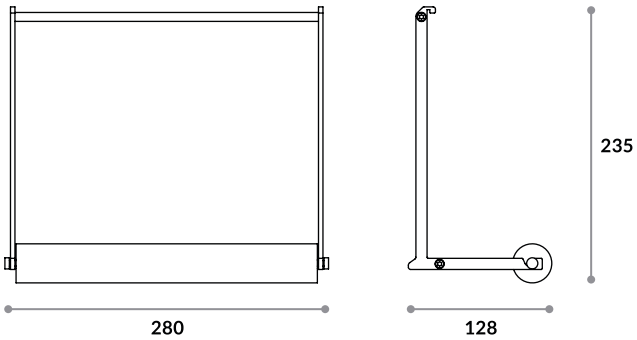

SPECS - FLAG

FLAG SIDE PROFILE

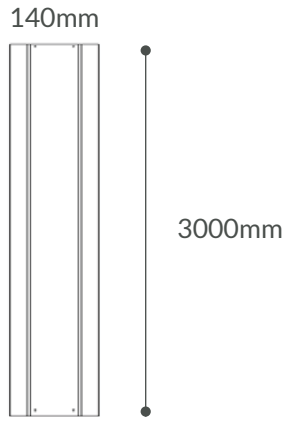

FLAG SHELF & RAILING

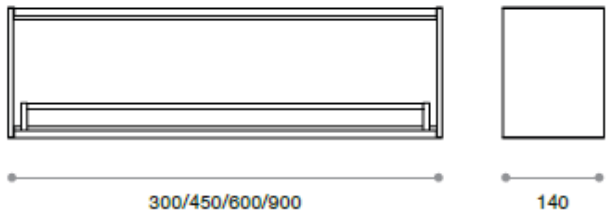

FLAG SHELF RAILING AND SUPPORT

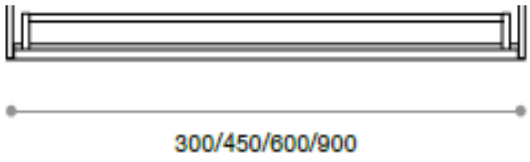

FLAG UTENSIL HOOK

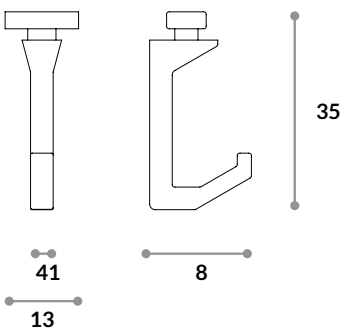

SPECS - FLAG

FLAG GLASS HOLDER

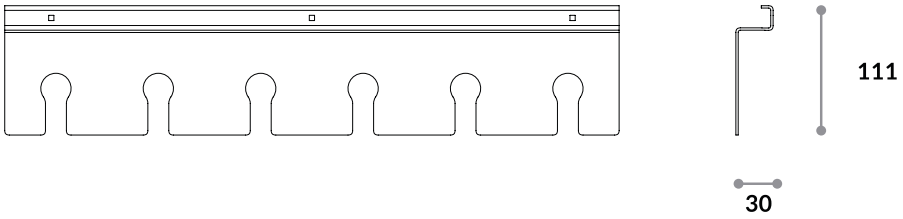

FLAG PAPER ROLL HOLDER

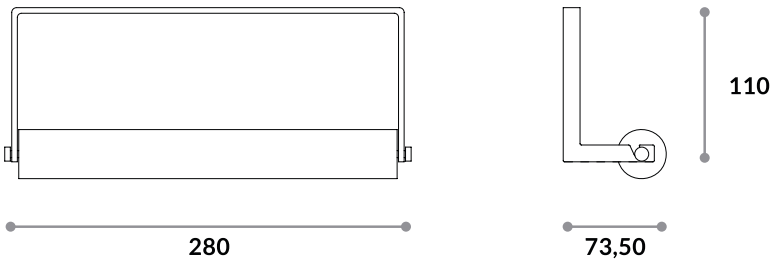

SPECS - INTERNA

INTERNA ALUMINIUM TUBE

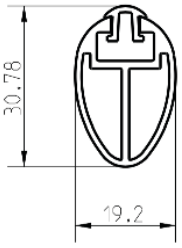

SPECS - SYSTEM 16

SYSTEM 16 - 250MM MODULAR SHELVING FRAME

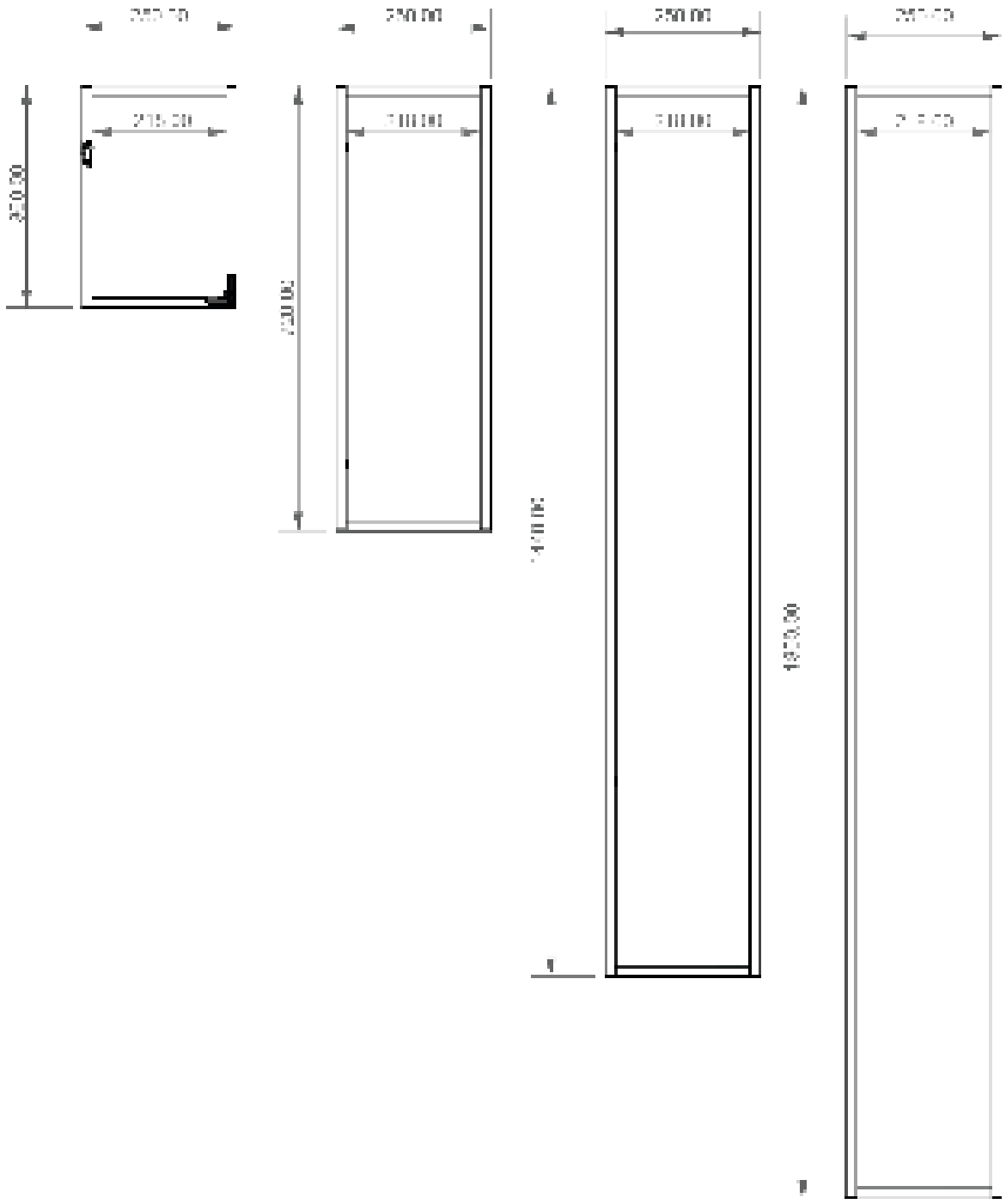

SPECS - SYSTEM 16

SYSTEM 16 - 356MM MODULAR SHELVING FRAME

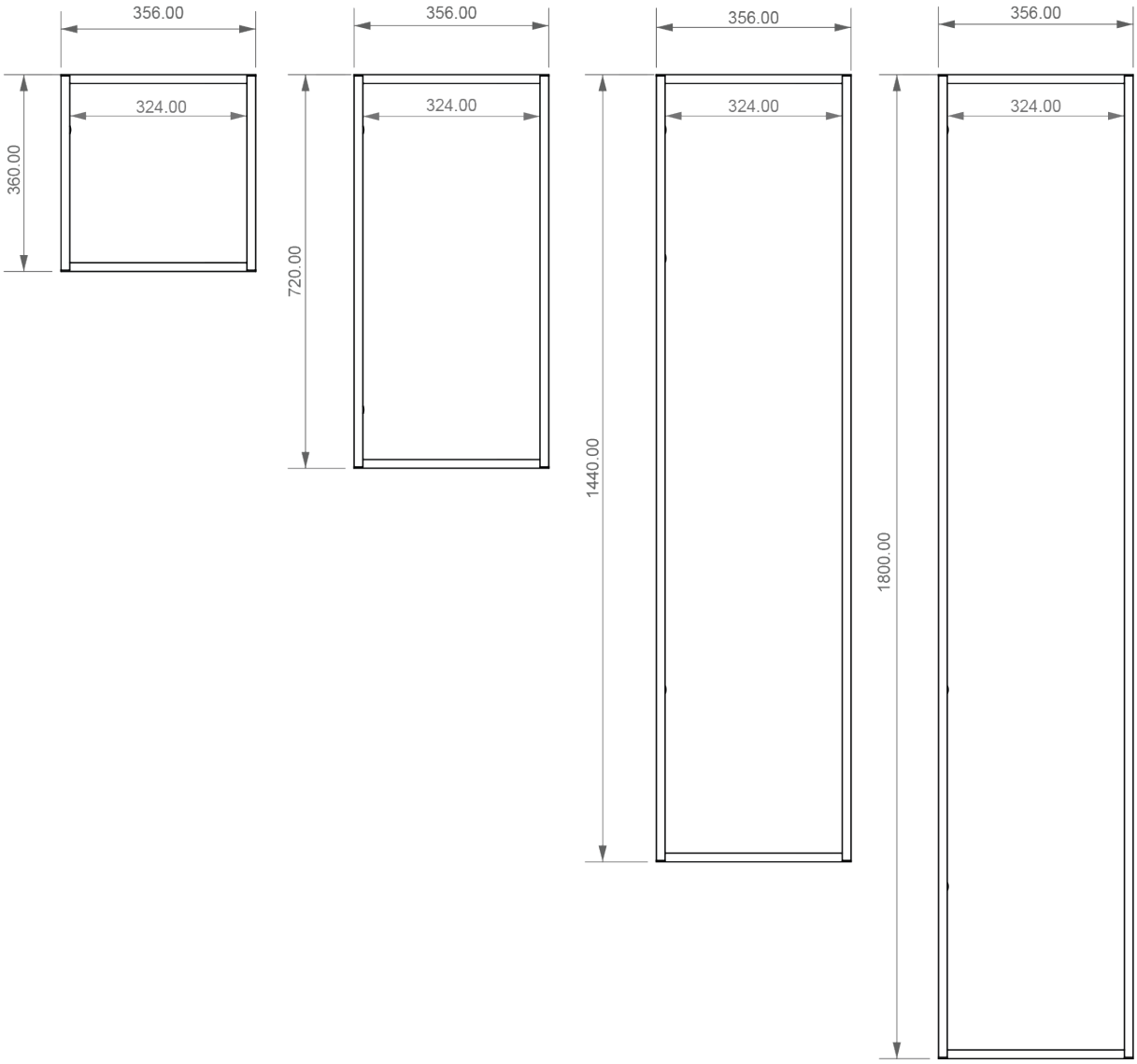

SYSTEM 16 - ADJUSTABLE LEGS

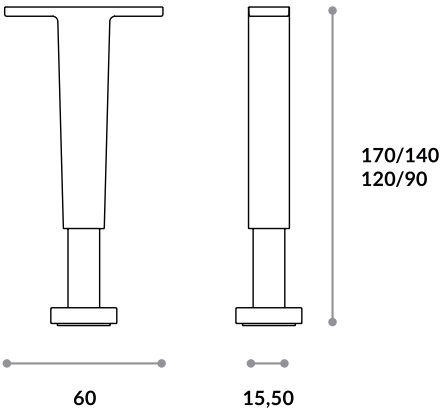

wilson &bradley

Contact us or visit our website for more information on any of our products

Online Store
www.wilbrad.com.au

Phone
1800 633 507

VIC
94 Bell Street
Preston VIC 3072

NSW
Unit 4, 3 Basalt Road
Greystanes NSW 2145

WA
19 Christable Way
Landsdale WA 6065

QLD
105 Corymbia Place
Parkinson QLD 4115

SA
79 Frederick St
Welland SA 5007

TAS
Ph: 1800 633 507

@wilsonandbradley

WB_CB_2306 - June 2020