wilson & bradley

Kia ora

Suitable for Cabinet Widths:

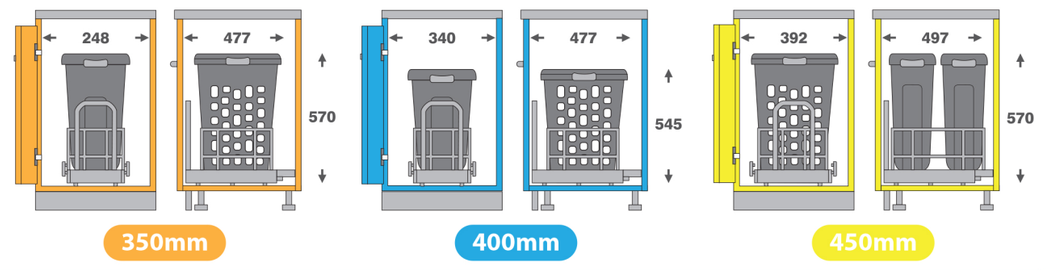

NOTE: Instructions are for both rubbish and laundry bins, sizes will vary between models.

Step 2

Step 2

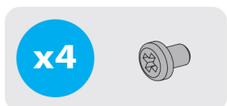

Step 5

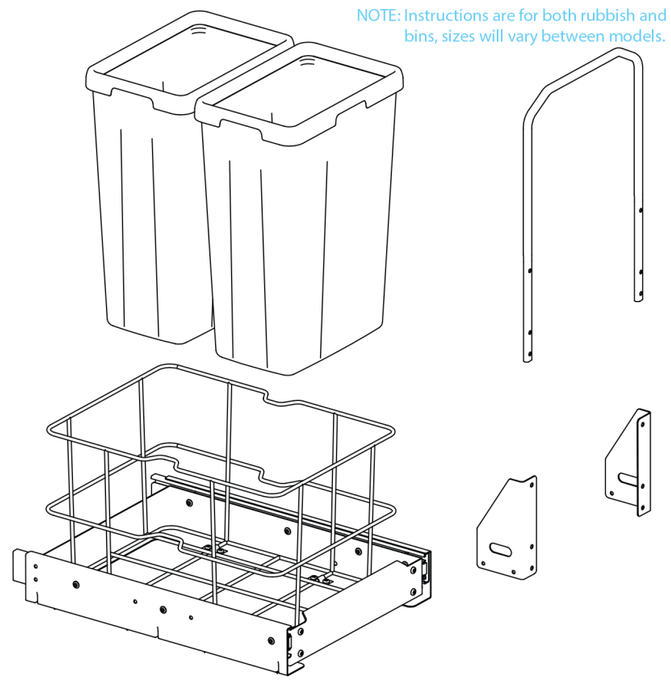

1

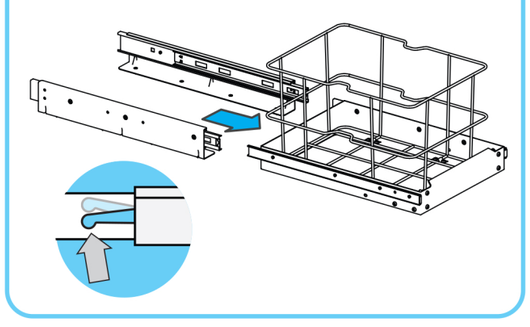

Separate runners from assembly using runner clips

2

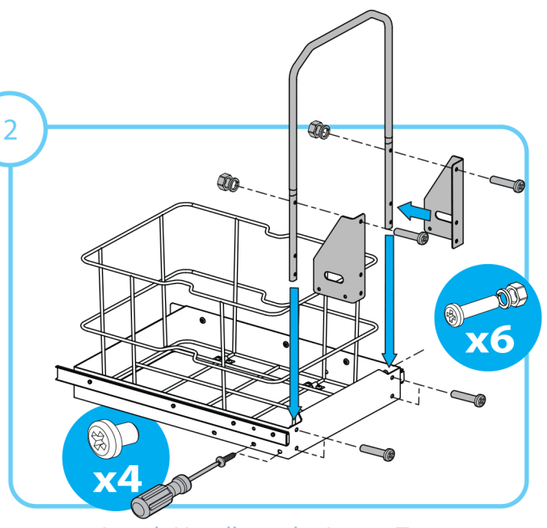

Attach Handle to the Lower Tray using Handle Arms and screws

3

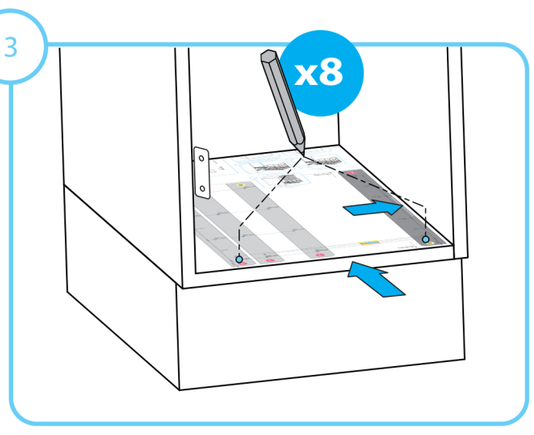

Place instructions in cabinet. Rotate to position dark grey bracket oppersite to hinges. Pencil Bracket holes using correct template

4

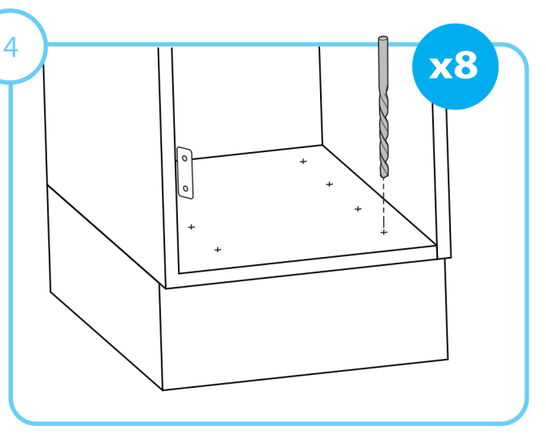

Drill Bracket holes in bottom of cabinet

5

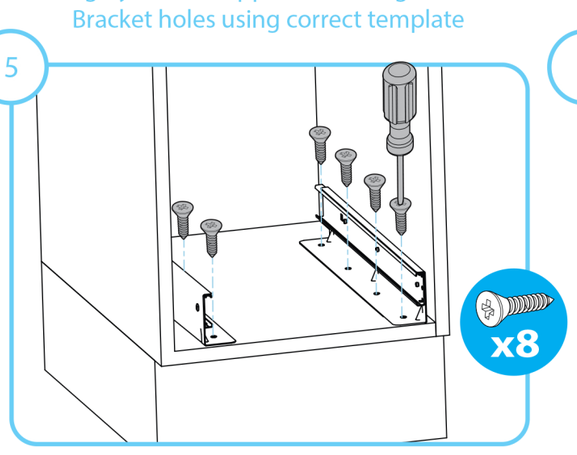

Screw Brackets to bottom of cabinet

6

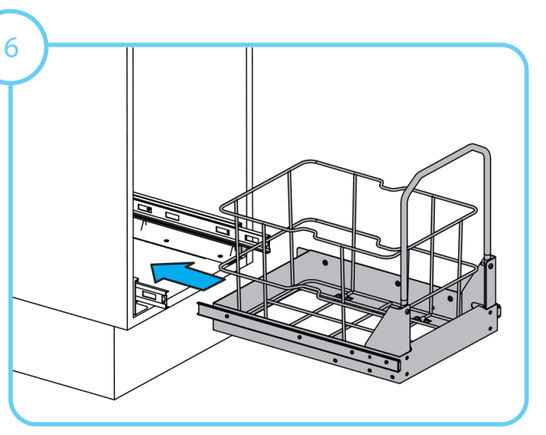

Slide the Lower Tray into runners. Makes click sound.

7

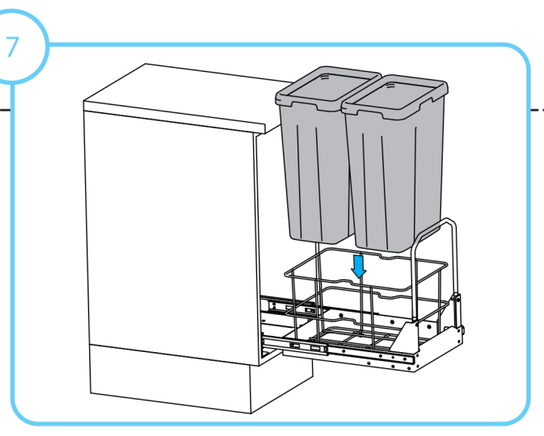
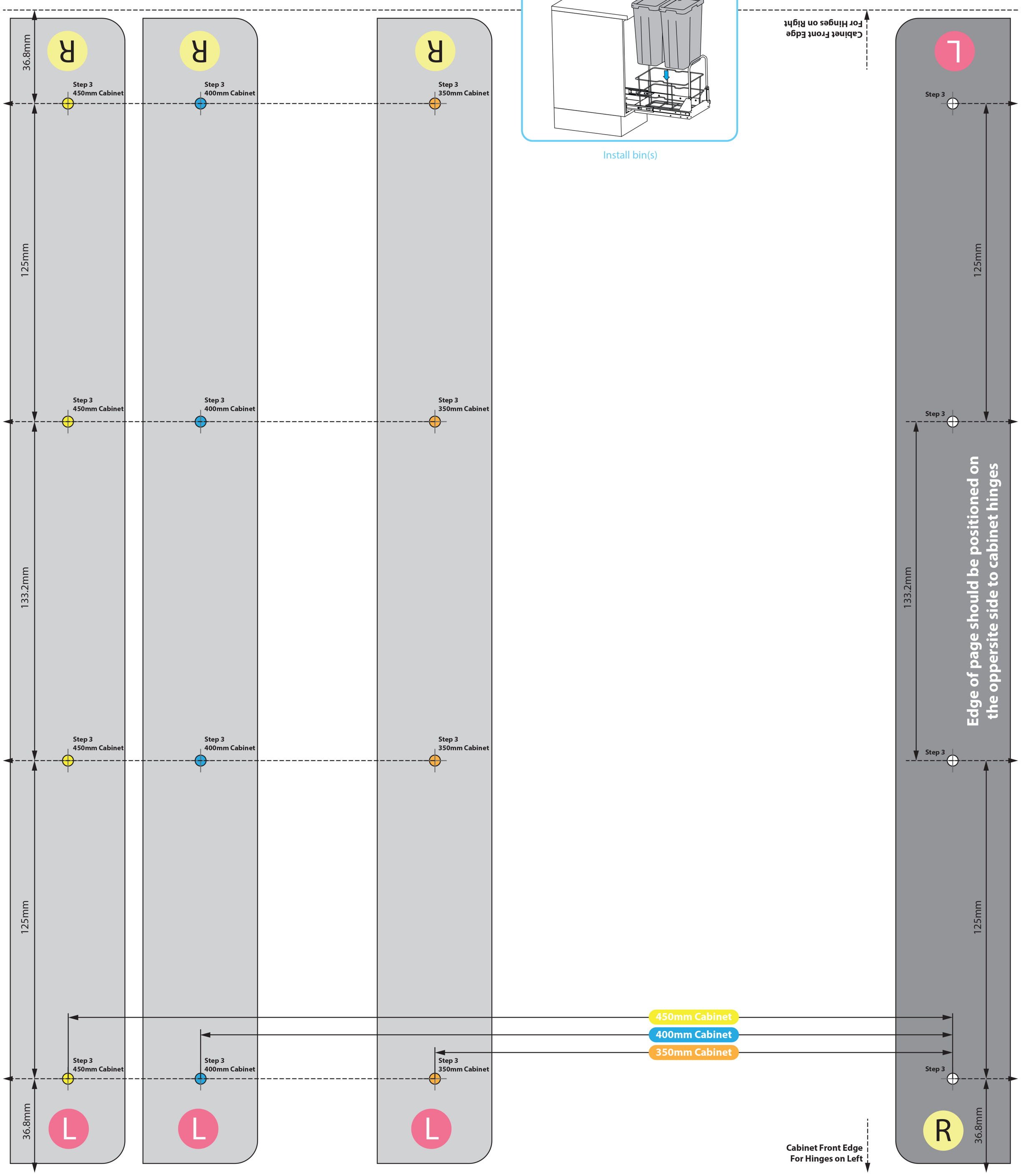
Install bin(s)